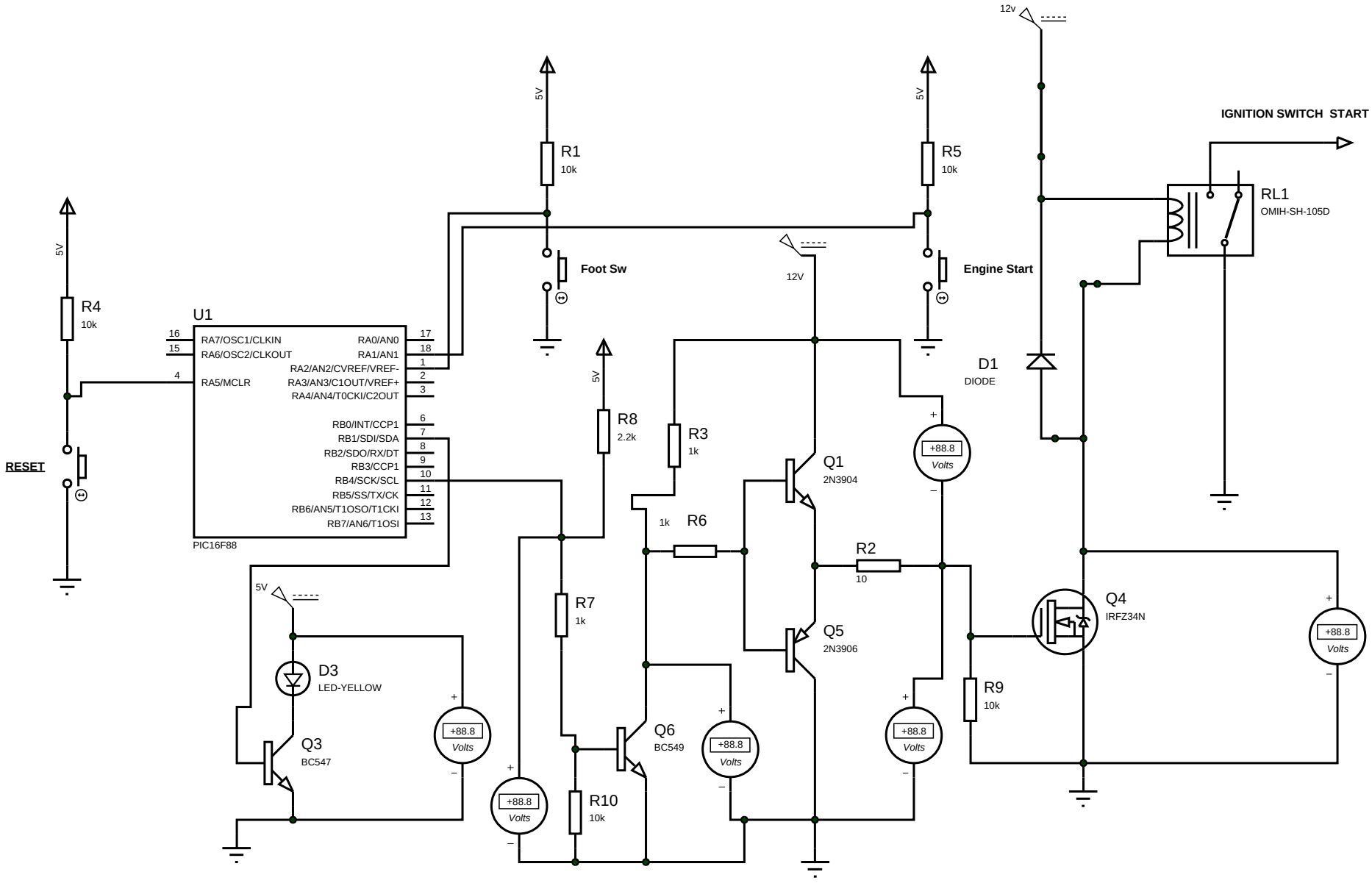
5V
R4
10k
RESET
U1
16
15
4
RA7/OSC1/CLKIN
RA6/OSC2/CLKOUT
RA5/MCLR
RA0/AN0
RA1/AN1
RA2/AN2/CVREF/VREF-
RA3/AN3/C1OUT/VREF+
RA4/AN4/T0CKI/C2OUT
RB0/INT/CCP1
RB1/SDI/SDA
RB2/SDO/RX/DT
RB3/CCP1
RB4/SCK/SCL
RB5/SS/TX/CK
RB6/AN5/T1OSO/T1CKI
RB7/AN6/T1OSI
17
18
1
2
3
6
7
8
9
10
11
12
13
PIC16F88
5V
R1
10k
Foot Sw
5V
R5
10k
Engine Start
12v
IGNITION SWITCH START
RL1
OMIH-SH-105D
12V
D1
DIODE
5V
R8
2.2k
R3
1k
Q1
2N3904
+88.8
Volts
1k
R6
R2
10
Q5
2N3906
Q4
IRFZ34N
+88.8
Volts
5V
D3
LED-YELLOW
Q3
BC547
+88.8
Volts
R7
1k
Q6
BC549
+88.8
Volts
R9
10k
+88.8
Volts
+88.8
Volts
R10
10k